Elegance Backdrop
SKU: 1002042/1002043

POST UP STAND
YOUR **MESSAGE** IS OUR **MISSION**

Frame Installation

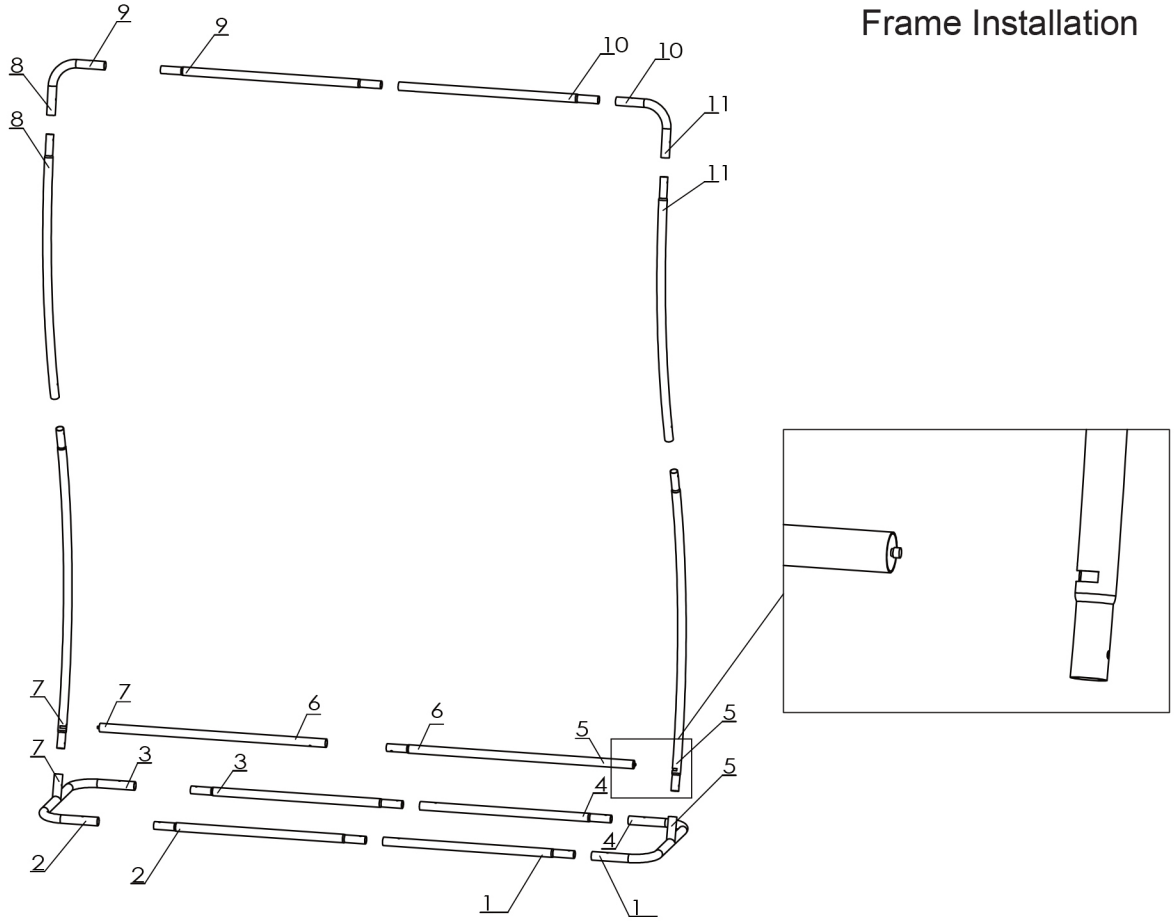

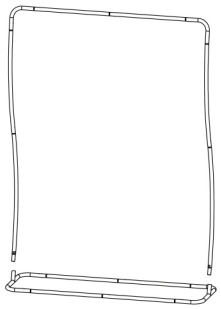

step 1:

There are some figures labeled on every tubes, connecting the same figures together to make up of the frame.
(Please noted that don't install the Horizontal tube now)

Horizontal tube

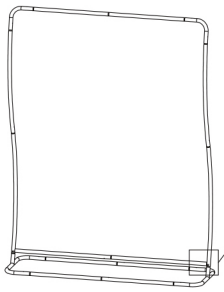

step 2:

Assemble horizontal tube

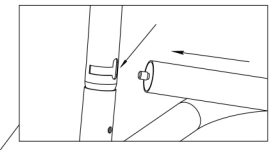

The horizontal tube aims at the slot, push and put it in the down slot.

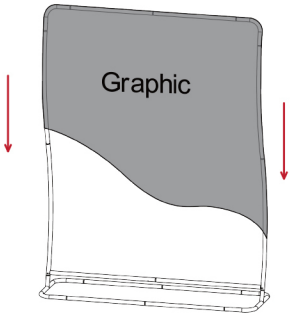

step 3:

Put the Graphic on the ready Frame

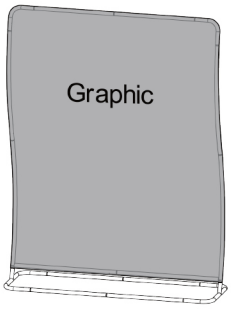

step 4:

Completed.

If you have any questions regarding our products, please visit us at **www.postupstand.com** or contact customer service at **1-800-935-3534.**